SS316L NEEDLE VALVE 10000PSI MALE X FEMALE

High Pressure Needle Valve · Male x Female NPT · Stainless Steel 316L · T-Handle

BRAND: SWLOK | SKU: SW-6050 | SIZE 1/4" TO 1" NPT | 10,000 PSI / 690 BAR

FIG. 1 | SS316L NEEDLE VALVE, MALE X FEMALE NPT, T-HANDLE

PRODUCT OVERVIEW

The SWLOK SS316L Needle Valve is a high pressure, multi-turn valve for precise regulation and positive shut-off at low flow rates. A fine-pitch stem drives a tapered needle into the seat, giving accurate throttling and a leak-tight seal at up to 10,000 psi.

The bar stock body is machined from 316L stainless steel with a male NPT inlet and female NPT outlet, so the valve threads directly into a port or fitting. Typical duties are pressure gauge isolation, instrument shut-off, sampling and calibration lines in oil and gas, chemical and marine service.

Valve type	**Needle valve, straight pattern**
Operation	**Manual, multi-turn T-handle**
Body material	**Stainless steel 316L**
End connection	**Male NPT inlet x female NPT outlet**
Pressure rating	**10,000 psi (690 bar) WP**
Size range	**1/4" to 1" (DN8 to DN25)**

TECHNICAL SPECIFICATION

Series	**HP-H, high pressure**
Pattern	**Straight, through flow**
Threads	**NPT, ASME B1.20.1**
Bonnet	**Screwed, with lock pin**
Stem packing	**PTFE, adjustable**
Stem threads	**Rolled and lubricated**

Working pressure	**10,000 psi (690 bar)**
Temperature	**-30°C to +200°C**
Shell test	**1.5 x working pressure, hydrostatic**
Testing	**100% factory tested**
Sour service	**Conforms to NACE MR0175**
Flow direction	**Marked by arrow on body**

BILL OF MATERIALS

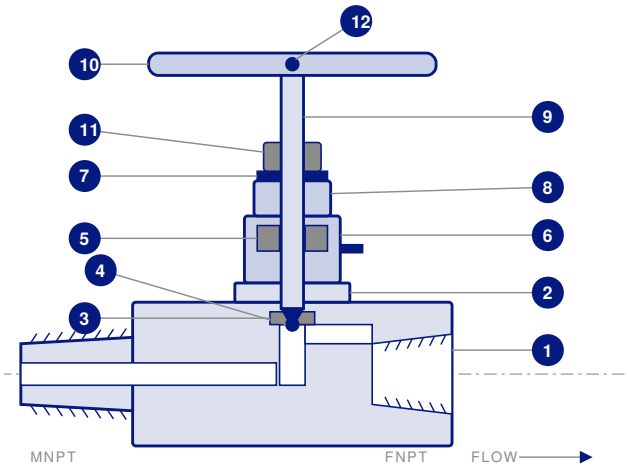

FIG. 2 | SECTIONAL ARRANGEMENT

#	COMPONENT	MATERIAL
1	Valve body	SS316L
2	Chuck nut	SS316
3	Seat	PTFE
4	Ball	SS316
5	Stem seal	PTFE
6	Gland	SS316
7	Spring washer	SS304
8	Lock nut	SS304
9	Stem	SS316
10	Handle	SS304
11	Sleeve	PVC
12	Pin	SS304

Install with flow in the direction of the arrow marked on the body. Valves in other materials are available on request.

DIMENSIONS

SIZE	DN	NPT	L (MM)	S (MM)	H MAX. (MM)
1/4"	DN8	1/4"	68.00	28.00	79.00
3/8"	DN10	3/8"	76.00	28.00	79.00
1/2"	DN15	1/2"	88.00	32.00	80.00
3/4"	DN20	3/4"	88.00	38.00	84.00
1"	DN25	1"	104.00	50.00	101.00

Dimensions for the 10,000 psi male x female version. L = overall length, S = body square, H = maximum height with the valve fully open. All dimensions in mm and nominal, for reference only. Certified drawings for the supplied size are issued on request.

ORDERING INFORMATION

FIELD	OPTIONS
Product code	SW-6050
Size	1/4", 3/8", 1/2", 3/4", 1"
Ends	Male NPT inlet x female NPT outlet
Pressure class	10,000 psi
Material	SS316L body. Other materials on request
Order example	**SW-6050 / 1/2" / MNPT x FNPT / 10,000 PSI / SS316L**

Stock held in Dubai for fast despatch across the UAE and GCC. Contact our sales desk for pricing, availability, project quantities and certification requirements.

PRESSURE AND TEMPERATURE

Working pressure	**10,000 psi (690 bar) at ambient**
Shell test	**15,000 psi (1.5 x WP), hydrostatic**
Temperature	**-30°C to +200°C with PTFE packing**
Media	**Liquids and gases compatible with 316L and PTFE**

Maximum temperature is limited by the PTFE packing. Pressure ratings reduce at elevated temperature. Confirm duty with SWBM for steam, cyclic or high temperature service.

TYPICAL APPLICATIONS

- Pressure gauge and transmitter isolation
- Instrument shut-off and root valves
- Gas and fluid sampling systems
- Hydraulic test benches and calibration rigs
- Chemical injection and process lines
- Oil and gas, chemical and marine high pressure systems

COMPLIANCE AND QUALITY

- Body machined from SS316L bar stock
- NPT threads to ASME B1.20.1
- Materials conform to NACE MR0175 for sour service
- 100% factory tested, shell test at 1.5 x working pressure
- Heat number marked on every body
- Material test certificate EN 10204 3.1 on request
- Bonnet lock pin prevents accidental bonnet removal

INSTALLATION AND OPERATION

- Flush the line to remove debris before installation
- Install with flow in the direction of the arrow on the body
- Apply PTFE tape or an approved sealant to male NPT threads only
- Hold the valve body flats with a spanner, never the bonnet, when tightening
- Turn the handle clockwise to close and anticlockwise to open. Hand tight shut-off only, do not use extension bars
- If the stem weeps, tighten the packing nut slightly while the valve is depressurised

COMPANY
Sunel Wala Building Materials
Trading Co. LLC (SWBM)
Dubai, United Arab Emirates

SALES ENQUIRIES
info@swbm-fittings.com
Tel: +971 4 238 5652
Mobile / WhatsApp: +971 50 748 1772

ONLINE
www.swbm-fittings.com
Brand: SWLOK

The information in this data sheet is provided in good faith and is believed to be accurate at the date of issue. Dimensions and ratings are nominal and may vary with the manufacturer and production batch. It remains the responsibility of the purchaser to confirm that the product is suitable for the intended service conditions, including the selection of compatible tubing. Sunel Wala Building Materials Trading Co. LLC reserves the right to amend specifications without prior notice. This document does not form part of any contract of sale.