FLEXIBLE CONNECTOR FLANGED TYPE PN16

Single Sphere Rubber Expansion Joint · EPDM Body, Nylon Reinforced · PN16 Floating Flanges

BRAND: JARTA | SKU: SW-0041 | SIZE 1.1/2" TO 24" | PN16 / 16 BAR



FIG. 1 | FLANGED TYPE PN16, SINGLE SPHERE

PRODUCT OVERVIEW

The SWBM Flexible Connector Flanged Type PN16 is a single sphere rubber expansion joint used to absorb vibration, noise, thermal movement and minor misalignment in pipework. The moulded EPDM sphere is reinforced with nylon cord fabric plies and steel bead wire rings, giving a flexible element that carries full line pressure while isolating connected plant from pipe stress.

Floating carbon steel flanges rotate freely for bolt hole alignment and are drilled to EN 1092 PN16. No gaskets are needed, the moulded rubber face seals directly against the mating pipe flange. The joint accepts axial compression, axial extension, lateral offset and angular deflection, and is the standard choice on pump suction and discharge connections.

Product type	**Single sphere rubber expansion joint**
Body material	**EPDM rubber, nylon cord reinforced**
End connection	**Flanged, EN 1092 PN16 drilling**
Flange material	**Carbon steel, zinc plated**
Pressure rating	**PN16 (16 bar / 232 psi)**
Size range	**1.1/2" to 24" (DN40 to DN600)**

TECHNICAL SPECIFICATION

Design type	**Single sphere, moulded and vulcanised**	Working pressure	**16 bar (232 psi), non-shock**
Body construction	**EPDM inner liner and outer cover**	Test pressure	**24 bar (1.5 x rated)**
Reinforcement	**Nylon cord plies, steel bead wire**	Burst pressure	**48 bar nominal**
Flange drilling	**EN 1092-1 / EN 1092-2, PN16**	Vacuum rating	**0.08 MPa with support ring**
Flange type	**Floating, free to rotate**	Temperature range	**-20°C to +110°C**
Face to face	**Per dimensions table**	Angular movement	**15° maximum**

MEDIA AND COMPOUND SELECTION

COMPOUND	TYPICAL MEDIA	TEMPERATURE RANGE
EPDM	Water, chilled and condenser water, dilute acids and alkalis	**-20°C to +110°C**
NBR	Mineral oil, diesel, lubricating oil and oily water	**-20°C to +90°C**
CR (neoprene)	General water, sea water, weak acids, outdoor exposure	**-20°C to +100°C**
NR	Abrasive slurries and sand laden water	**-20°C to +80°C**

EPDM is supplied as standard and must not be used on mineral oil or hydrocarbon media. State the service medium, temperature and pressure at enquiry.

BILL OF MATERIALS

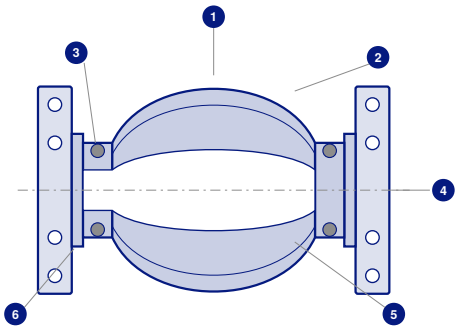

FIG. 2 | SECTIONAL ARRANGEMENT

#	COMPONENT	MATERIAL
1	Outer cover	EPDM rubber, weather and ozone resistant
2	Reinforcement ply	Nylon cord fabric, multiple plies
3	Bead wire ring	Steel wire rope, vulcanised in
4	Floating flange	Carbon steel, zinc plated
5	Inner liner	EPDM rubber, smooth bore
6	Retaining ring	Carbon steel, zinc plated

Vacuum support rings, control units and limit rods are available on request. NBR, CR and NR body compounds suit oil bearing, weathering and abrasive duties.

DIMENSIONS AND MOVEMENTS

SIZE	DN	L (MM)	FLANGE OD (MM)	PCD (MM)	BOLT HOLES	AXIAL COMP. (MM)	AXIAL EXT. (MM)	LATERAL (MM)
1.1/2"	40	95	150	110	4 x 18	10	6	9
2"	50	105	165	125	4 x 18	10	7	10
2.1/2"	65	115	185	145	4 x 18	13	7	11
3"	80	135	200	160	8 x 18	15	8	12
4"	100	150	220	180	8 x 18	19	10	13
5"	125	165	250	210	8 x 18	19	12	13
6"	150	180	285	240	8 x 22	20	12	14
8"	200	210	340	295	12 x 22	25	16	22
10"	250	230	405	355	12 x 26	25	16	22
12"	300	245	460	410	12 x 26	25	16	22
14"	350	255	520	470	16 x 26	25	16	22
16"	400	255	580	525	16 x 30	25	16	22
18"	450	255	640	585	20 x 30	25	16	22
20"	500	255	715	650	20 x 33	25	16	22
24"	600	260	840	770	20 x 36	25	16	22

L = face to face length at neutral installed length. Movements are non concurrent maxima, angular movement 15° maximum. Flange drilling to EN 1092-1 / EN 1092-2 PN16, flanges float and rotate freely for bolt hole alignment. Figures are nominal, certified drawings are issued on request.

ORDERING INFORMATION

FIELD	OPTIONS
Product code	SW-0041
Size	1.1/2", 2", 2.1/2", 3", 4", 5", 6", 8", 10", 12", 14", 16", 18", 20", 24"
Flange drilling	PN16 to EN 1092. PN10, PN25 or ASME Class 150 on request
Body compound	EPDM standard. NBR, CR or NR on request
Flange material	Carbon steel zinc plated standard. Hot dip galvanised or SS316 on request
Order example	**SW-0041 / 4" / PN16 / EPDM**

Stock held in Dubai for fast despatch across the UAE and GCC. Contact our sales desk for pricing, availability, project quantities and certification requirements.

PRESSURE AND TEMPERATURE

Working pressure (EPDM)	**16 bar (232 psi) at ambient**
Test pressure	**24 bar, 1.5 x rated**
Burst pressure	**48 bar nominal, 3 x rated**
Vacuum service	**0.08 MPa with support ring**
Temperature range	**-20°C to +110°C**
Peak temperature	**+120°C, intermittent**

Ratings apply to cold, non-shock water service with an EPDM body. Derating applies above +80°C and should be confirmed with SWBM before order. EPDM is not suitable for mineral oil or hydrocarbon service, specify an NBR body for those media.

TYPICAL APPLICATIONS

- Pump suction and discharge connections
- Chilled water, condenser water and HVAC plant rooms
- Water supply, booster sets and pressurisation systems
- Cooling towers, chillers and air handling plant
- Sea water, ballast and general marine service lines
- Industrial process and utility piping

COMPLIANCE AND QUALITY

- Body moulded and vulcanised, nylon cord reinforced throughout
- Flange drilling to EN 1092-1 / EN 1092-2 PN16
- Hydrostatic shell test at 1.5 x rated pressure
- 100% pressure tested before despatch
- EPDM compound suitable for potable, chilled and condenser water
- Material and test certificate EN 10204 3.1 on request
- Control units, limit rods and vacuum support rings on request

INSTALLATION AND OPERATION

- Flush the line thoroughly before installation to clear weld slag, sand and debris
- Check that the pipe flange faces are parallel and aligned within the stated installation tolerance
- Do not stretch or compress the joint to make up a gap in the pipework, set the pipe gap to the face to face dimension
- Fit the joint dry, gaskets are not required, the moulded rubber face seals against the pipe flange
- Tighten the bolts evenly in a diagonal sequence, do not over tighten
- Fit control units or limit rods where the line is unanchored or where the joint is used on suction duty
- Keep the joint clear of heat sources, direct sunlight, ozone and sharp tools

COMPANY
Sunel Wala Building Materials
Trading Co. LLC (SWBM)
Dubai, United Arab Emirates

SALES ENQUIRIES
info@swbm-fittings.com
Tel: +971 4 238 5652
Mobile / WhatsApp: +971 50 748 1772

ONLINE
www.swbm-fittings.com
Brand: JARTA

The information in this data sheet is provided in good faith and is believed to be accurate at the date of issue. Dimensions, weights and ratings are nominal and may vary with the manufacturer and production batch. It remains the responsibility of the purchaser to confirm that the product is suitable for the intended service conditions. Sunel Wala Building Materials Trading Co. LLC reserves the right to amend specifications without prior notice. This document does not form part of any contract of sale.