# CS FORGED GATE VALVE CL1500

Bolted Bonnet OS&Y Gate Valve · Forged Steel ASTM A105N · NPT Threaded

BRAND: GM VALVES | SKU: P-0011 | SIZE 3/8" TO 2" | CLASS 1500



FIG. 1 | CS FORGED GATE VALVE CLASS 1500, HANDWHEEL OPERATED

## PRODUCT OVERVIEW

The GM Valves Class 1500 forged steel gate valve is a linear motion isolation valve for small bore, high pressure piping. A solid wedge slides between two renewable seat rings to give full shut-off, and lifts clear of the bore when open so that pressure drop across the valve is low.

The body, bonnet and gland flange are forged in ASTM A105N. The valve has a bolted bonnet with a spiral wound gasket, an outside screw and yoke with rising stem, an integral back seat and 13% chrome trim. Graphite packing with anti-extrusion rings seals the stem. Design is to API 602 / ISO 15761.

| | |
|---|---|
| Valve type | **Gate valve, bolted bonnet, OS&Y** |
| Operation | **Handwheel, rising stem** |
| Body material | **Forged carbon steel ASTM A105N** |
| End connection | **Female NPT threaded** |
| Pressure class | **Class 1500** |
| Size range | **3/8" to 2" (DN10 to DN50)** |

## TECHNICAL SPECIFICATION

| | |
|---|---|
| Design standard | **API 602 / ISO 15761** |
| Testing standard | **API 598** |
| Pressure and temperature | **ASME B16.34** |
| Face to face | **Manufacturer standard** |
| Thread standard | **NPT to ASME B1.20.1** |
| Trim | **13% Cr (SS 410 seats, F6a stem)** |

| | |
|---|---|
| Shell hydro test | **390 kg/cm² (382 bar), 15 s** |
| Seat hydro test | **290 kg/cm² (284 bar), 15 s** |
| Back seat test | **290 kg/cm² (284 bar), 15 s** |
| Seat pneumatic test | **7 kg/cm² (6.9 bar), 15 s** |
| Temperature range | **-29°C to +425°C** |
| Country of origin | **India** |

## BILL OF MATERIALS

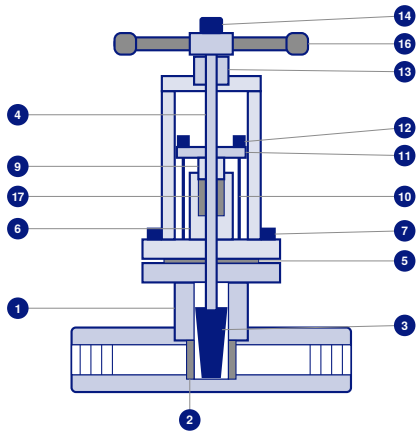


FIG. 2 | SECTIONAL ARRANGEMENT

| # | COMPONENT | MATERIAL |
|---|---|---|
| 1 | Body | ASTM A105N |
| 2 | Seat ring (2 nos.) | ASTM A276 SS 410 |
| 3 | Wedge | ASTM A217 Gr. CA-15 |
| 4 | Stem | ASTM A182 Gr. F6a Cl. 2 |
| 5 | Gasket | SS 316 spiral wound + graphite |
| 6 | Bonnet | ASTM A105N |
| 7 | Hex bolt (4 nos.) | ASTM A193 Gr. B7 |
| 8 | Eye bolt pin (2 nos.) | ASTM A276 SS 410 |
| 9 | Gland bush | ASTM A276 SS 410 |
| 10 | Eye bolt (2 nos.) | ASTM A193 Gr. B7 |
| 11 | Gland flange | ASTM A105N |
| 12 | Eye bolt nut (2 nos.) | ASTM A194 Gr. 2H |
| 13 | Yoke sleeve | ASTM A582 SS 416 |
| 14 | Stem nut | ASTM A194 Gr. 2H |
| 15 | Name plate | Stainless steel |
| 16 | Handwheel | Malleable iron / SG iron |
| 17 | Gland packing (5 rings) | Flexible graphite, braided end rings |

Items 8 and 15 are not shown in Fig. 2. The back seat is integral with the bonnet. Gland packing is corrosion inhibited die formed flexible graphite with braided anti-extrusion rings.

## DIMENSIONS AND WEIGHTS

| SIZE | DN | F/F (MM) | ØP BORE (MM) | C THREAD (MM) | H OPEN (MM) | H CLOSED (MM) | Ø WHEEL (MM) | WEIGHT (KG) |
|---|---|---|---|---|---|---|---|---|
| **3/8"** | 10 | 73 | 6.5 | 14 | 151 | 138 | 86 | 1.6 |
| **1/2"** | 15 | 80 | 9.5 | 14 | 151 | 138 | 86 | 1.9 |
| **3/4"** | 20 | 100 | 12.7 | 16 | 178 | 162 | 116 | 3.1 |
| **1"** | 25 | 120 | 17.5 | 20 | 227 | 207 | 150 | 6.5 |
| **1.1/4"** | 32 | 120 | 23 | 20 | 227 | 207 | 150 | 6.0 |
| **1.1/2"** | 40 | 130 | 28.6 | 24 | 256 | 224 | 150 | 9.5 |
| **2"** | 50 | 140 | 36.5 | 26 | 303 | 263 | 250 | 14.6 |

F/F = face to face, tolerance ±3 mm. ØP = minimum bore. C = minimum thread engagement. H is measured from the pipe centreline and is approximate. Figures are taken from the manufacturer drawing, are nominal and are given for guidance only. Certified drawings are issued on request.

## ORDERING INFORMATION

| FIELD | OPTIONS |
|---|---|
| Product code | P-0011 |
| Size | 3/8", 1/2", 3/4", 1", 1.1/4", 1.1/2", 2" |
| End connection | Female NPT |
| Body / trim | A105N body and bonnet, 13% Cr trim |
| Operation | Handwheel |
| Order example | **P-0011 / 3/4" / NPT / A105N / CL1500** |

Stock held in Dubai for fast despatch across the UAE and GCC. Contact our sales desk for pricing, availability, project quantities and certification requirements.

## PRESSURE AND TEMPERATURE

| | |
|---|---|
| -29°C to +38°C | **255.3 bar (3705 psi)** |
| +100°C | **233.0 bar** |
| +200°C | **219.0 bar** |
| +300°C | **199.1 bar** |
| +400°C | **173.6 bar** |
| +425°C | **143.8 bar** |

Maximum non-shock working pressure for Class 1500, material group 1.1 (A105), derived from ASME B16.34. Values are nominal. Confirm the rating for your operating temperature with SWBM before ordering.

## COMPLIANCE AND QUALITY

- Design to API 602 / ISO 15761
- Pressure and temperature rating to ASME B16.34
- Pressure tested to API 598
- NPT threads to ASME B1.20.1
- Shell, seat and back seat tested
- Renewable seat rings, integral back seat
- Material test certificate EN 10204 3.1 on request

## TYPICAL APPLICATIONS

- Oil and gas production and process piping
- Refinery and petrochemical utility lines
- Power generation, steam and condensate service
- Instrument, drain, vent and bypass connections
- High pressure water, oil and gas lines
- General industrial process piping

## INSTALLATION AND OPERATION

- Flush the line before installation to clear weld slag, scale and debris
- Check the body marking for size, class and material against the line specification
- Apply PTFE tape or an approved thread sealant to the male pipe thread only
- Tighten with a wrench on the valve end nearest the joint. Never lever on the bonnet, handle or handwheel
- Turn the handwheel clockwise to close. Do not use wheel keys or extensions
- Use fully open or fully closed. A gate valve is not suitable for throttling
- Check the gland after commissioning and nip up the gland nuts evenly if required

COMPANY

**Sunel Wala Building Materials**
Trading Co. LLC (SWBM)
Dubai, United Arab Emirates

SALES ENQUIRIES

**info@swbm-fittings.com**
Tel: +971 4 238 5652
Mobile / WhatsApp: +971 50 748 1772

ONLINE

**www.swbm-fittings.com**
Brand: GM Valves

The information in this data sheet is provided in good faith and is believed to be accurate at the date of issue. Dimensions, weights and ratings are nominal and may vary with the manufacturer and production batch. It remains the responsibility of the purchaser to confirm that the product is suitable for the intended service conditions. Sunel Wala Building Materials Trading Co. LLC reserves the right to amend specifications without prior notice. This document does not form part of any contract of sale.