CS FORGED GLOBE VALVE CL800

Forged Steel Globe Valve to API 602 · ASTM A105N · Bolted Bonnet, NPT Ends

BRAND: SW FLOW CONTROLS | SKU: P-0012 | SIZE 1/2" TO 2" | CLASS 800



FIG. 1 | CS FORGED GLOBE VALVE CL800, BOLTED BONNET

PRODUCT OVERVIEW

The SW Flow Controls CS Forged Globe Valve is a Class 800, reduced port valve to API 602 with an ASTM A105N forged carbon steel body and bonnet. It uses linear motion of a disc against a stationary seat, so it suits both flow regulation and positive shut-off in small bore process and utility lines.

The trim is 410 stainless steel with a hardfaced seat for wear resistance. A spiral wound 316 and graphite gasket seals the bolted bonnet, graphite packing seals the stem, and an outside screw and yoke with a 416 yoke sleeve keeps the stem threads clear of the line fluid. Ends are NPT female threaded.

Valve type	**Globe valve, OS and Y, reduced port**
Operation	**Manual handwheel**
Body material	**ASTM A105N forged carbon steel**
End connection	**Female NPT threaded**
Pressure class	**Class 800**
Size range	**1/2" to 2" (DN15 to DN50)**

TECHNICAL SPECIFICATION

Design standard	**API 602**	Body / bonnet	**ASTM A105N**
Bonnet	**Bolted bonnet**	Trim	**410, seat hardfaced**
Port	**Reduced port**	Stem	**410, outside screw and yoke**
Threads (NPT)	**ASME B1.20.1**	Gasket	**Spiral wound, 316 + graphite**
Testing	**API 598**	Packing	**Graphite**
Pressure-temperature	**ASME B16.34**	Bolting	**B7M / 2HM**

BILL OF MATERIALS

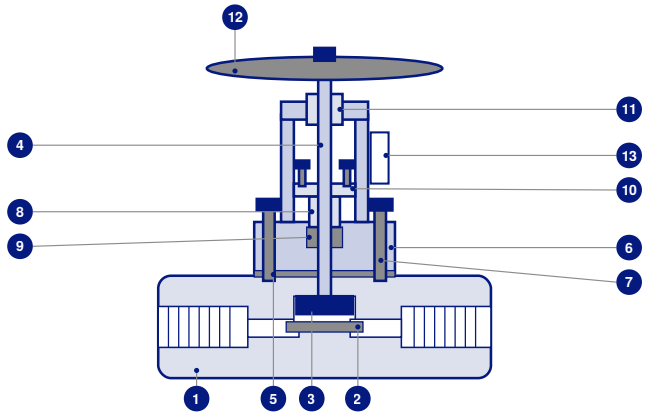

FIG. 2 | SECTIONAL ARRANGEMENT (SCHEMATIC)

#	COMPONENT	MATERIAL
1	Body	ASTM A105N
2	Seat *	410 + HF (hardfaced)
3	Disc *	410
4	Stem *	410
5	Gasket	316 + graphite (SPW)
6	Bonnet	ASTM A105N
7	Bonnet bolt	B7M
8	Gland *	410
9	Packing	Graphite
10	Gland flange, nut, stud	A105N, 2HM, B7M
11	Yoke sleeve	416
12	Handwheel and nut	Carbon steel
13	Name plate	Aluminium

* Material may vary based on trim. Alternative trims and welded bonnet construction can be offered on request.

DIMENSIONS AND WEIGHTS

SIZE	DN	A END TO END (MM)	B CENTRE TO TOP, OPEN (MM)	C HANDWHEEL (MM)	D PORT (MM)	WEIGHT (KG)
1/2"	15	80	158	80	8.9	1.70
3/4"	20	90	168	80	11.9	2.00
1"	25	110	199	100	17.5	3.20
1.1/4"	32	127	232	120	22.1	5.30
1.1/2"	40	155	267	140	27.9	7.80
2"	50	170	292	140	34.0	10.60

Dimensions converted from the manufacturer table in inches (1 in = 25.4 mm, 1 lb = 0.4536 kg). Class 800, reduced port. Figures are nominal and given for guidance only. Certified drawings for the supplied size are issued on request.

ORDERING INFORMATION

FIELD	OPTIONS
Product code	P-0012
Size	1/2", 3/4", 1", 1.1/4", 1.1/2", 2"
End connection	Female NPT threaded
Body material	ASTM A105N
Trim	410 with hardfaced seat. Other trims on request
Order example	**P-0012 / 1" / NPT / CL800**

Stock held in Dubai for fast despatch across the UAE and GCC. Contact our sales desk for pricing, availability, project quantities and certification requirements.

PRESSURE AND TEMPERATURE

Pressure class	**Class 800, ASME B16.34**
Rating at -29°C to 38°C	**136 bar (1975 psi)**
Above 38°C	**Derate per ASME B16.34, Group 1.1**
Carbon steel limit	**Not for prolonged use above 425°C**

Ratings apply to the A105N body and bonnet. The service limit may be reduced by the trim, packing and gasket. Confirm duty with SWBM before use on steam or high temperature service.

TYPICAL APPLICATIONS

- Oil and gas production and utility piping
- Petrochemical and refinery process lines
- Power plant auxiliary systems
- Steam, condensate and drain lines
- Instrument root and bypass valves
- Industrial process piping

COMPLIANCE AND QUALITY

- Design and manufacture to API 602
- Pressure testing to API 598
- Pressure-temperature rating to ASME B16.34
- NPT threads to ASME B1.20.1
- Forged A105N body and bonnet
- Material test certificate EN 10204 3.1 on request

INSTALLATION AND OPERATION

- Install with flow in the direction of the arrow on the body, normally under the seat
- Flush the line before installation to clear scale and debris
- Apply PTFE tape or an approved sealant to the male pipe thread only
- Hold the valve on the body end flats when tightening, never on the bonnet or handwheel
- Turn the handwheel clockwise to close. Do not use a wheel key on the handwheel
- Check the gland nuts after first heat-up and tighten evenly if needed

COMPANY

Sunel Wala Building Materials
Trading Co. LLC (SWBM)
Dubai, United Arab Emirates

SALES ENQUIRIES

info@swbm-fittings.com
Tel: +971 4 238 5652
Mobile / WhatsApp: +971 50 748 1772

ONLINE

www.swbm-fittings.com
Brand: SW Flow Controls

The information in this data sheet is provided in good faith and is believed to be accurate at the date of issue. Dimensions, weights and ratings are nominal and may vary with the manufacturer and production batch. It remains the responsibility of the purchaser to confirm that the product is suitable for the intended service conditions. Sunel Wala Building Materials Trading Co. LLC reserves the right to amend specifications without prior notice. This document does not form part of any contract of sale.