SS 2PC BALL VALVE FB NPT

2-Piece Full Bore Threaded Ball Valve · Stainless Steel CF8M (316) · Lever Operated

BRAND: SW FLOW CONTROLS | SKU: P-0035 | SIZE 1/4" TO 4" | 1000 WOG / 69 BAR



FIG. 1 | SS 2PC BALL VALVE FB NPT, VINYL COATED LEVER HANDLE

PRODUCT OVERVIEW

The SW Flow Controls SS 2PC Ball Valve is a quarter-turn, two-piece full bore valve for on and off isolation in stainless steel threaded pipework. The body, cap and ball are cast in ASTM A351 CF8M (316) stainless steel, giving good corrosion resistance in water, oil, gas and general industrial service.

The full port bore keeps flow unrestricted with minimal pressure drop when the valve is open. PTFE seats give a tight shut-off, the stem is blow-out proof, and female NPT threaded ends suit American pattern pipework. Locking device, oval handle and wing handle options are available on request.

Valve type	**2-piece ball valve, full port**
Operation	**Manual, 90° quarter-turn lever**
Body material	**ASTM A351 CF8M (SS 316)**
End connection	**Female NPT threaded**
Pressure rating	**1000 psi (69 bar) WOG**
Size range	**1/4" to 4" (DN8 to DN100)**

TECHNICAL SPECIFICATION

Body design	**2-piece, screwed end cap**	Working pressure	**69 bar (1000 psi) WOG**
Port	**Full bore**	Max. temperature	**Approx. 230°C (P-T chart)**
Threads (NPT)	**ANSI B2.1**	Ball	**CF8M, floating**
Other thread standards	**BS 21, DIN 259 / 2999, ISO 228**	Handle	**AISI 304 lever, plastic grip**
Stem	**Blow-out proof**	Handle options	**Oval handle, wing handle**
Seats	**PTFE**	Locking device	**Optional**

BILL OF MATERIALS

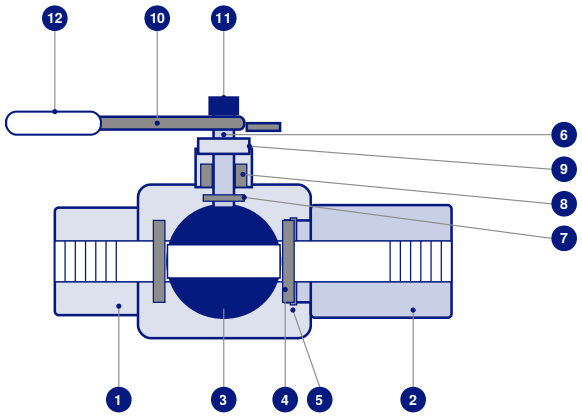

FIG. 2 | SECTIONAL ARRANGEMENT (SCHEMATIC)

#	COMPONENT	MATERIAL
1	Body	ASTM A351 CF8M
2	End cap	ASTM A351 CF8M
3	Ball	ASTM A351 CF8M
4	Ball seat (2 nos.)	PTFE
5	Joint gasket	PTFE
6	Stem (blow-out proof)	AISI 316
7	Thrust washer	PTFE
8	Stem packing (2 nos.)	PTFE
9	Gland nut	AISI 304
10	Handle	AISI 304
11	Stem washer and stem nut	AISI 304
12	Handle cover	Plastic

Locking device, oval handle and wing handle available on request. Materials as per manufacturer parts list.

DIMENSIONS

SIZE	DN	BORE D (MM)	L (MM)	H (MM)	W (MM)
1/4"	8	11.6	49.0	48.0	95.0
3/8"	10	12.7	49.0	48.0	95.0
1/2"	15	15.0	57.0	48.5	95.0
3/4"	20	20.0	65.0	54.5	108.0
1"	25	25.0	77.0	58.0	108.0
1.1/4"	32	32.0	90.0	70.5	130.0
1.1/2"	40	38.0	98.0	76.0	130.0
2"	50	50.0	121.0	83.5	150.0
2.1/2"	65	65.0	145.0	125.0	200.0
3"	80	80.0	166.0	136.0	200.0
4"	100	100.0	198.0	165.0	270.0

D = bore, L = face to face length, H = centreline to top of handle, W = handle length. Dimensions are taken from manufacturer data, are nominal and are given for guidance only. Weights are not published by the manufacturer and are confirmed on request. Certified drawings for the supplied size are issued on request.

ORDERING INFORMATION

FIELD	OPTIONS
Product code	P-0035
Size	1/4", 3/8", 1/2", 3/4", 1", 1.1/4", 1.1/2", 2", 2.1/2", 3", 4"
Thread	Female NPT
Material	ASTM A351 CF8M (SS 316)
Handle	Lever standard. Locking device, oval or wing handle on request
Order example	**P-0035 / 1" / NPT / LEVER**

Stock held in Dubai for fast despatch across the UAE and GCC. Contact our sales desk for pricing, availability, project quantities and certification requirements.

PRESSURE AND TEMPERATURE

Rated pressure (WOG)	**69 bar (1000 psi) up to 38°C**
Derating	**Linear above 38°C, by PTFE seat**
Approx. at 150°C	**33 to 41 bar, depending on size**
Approx. at 230°C	**7 bar (chart limit)**

Values above 38°C are read from the manufacturer pressure-temperature chart and are indicative. Sizes 1/4" to 1" carry the highest chart rating. Confirm duty with SWBM before use outside these ranges.

TYPICAL APPLICATIONS

- Water treatment and process water lines
- Oil and gas isolation duty
- Compressed air and inert gas lines
- Chemical and general industrial pipework
- Utility services in plant and building systems
- General on and off isolation

COMPLIANCE AND QUALITY

- Pipe threads in accordance with ANSI B2.1 (NPT)
- Alternative thread standards: BS 21-1973, DIN 259 / 2999, ISO 228
- Body, cap and ball in ASTM A351 CF8M stainless steel
- Blow-out proof stem, full port design
- Material test certificates available on request
- Locking device available as an option

INSTALLATION AND OPERATION

- Flush the line thoroughly before installation to clear debris, scale and thread swarf
- Install with the valve in the fully open position
- Apply PTFE tape or an approved sealant to the male pipe thread only
- Tighten on the end hexagon flats, never on the handle or stem
- The valve is open when the lever is in line with the pipe, and closed at 90°
- Operate the valve periodically in low use lines to prevent seat sticking

COMPANY

Sunel Wala Building Materials
Trading Co. LLC (SWBM)
Dubai, United Arab Emirates

SALES ENQUIRIES

info@swbm-fittings.com
Tel: +971 4 238 5652
Mobile / WhatsApp: +971 50 748 1772

ONLINE

www.swbm-fittings.com
Brand: SW Flow Controls

The information in this data sheet is provided in good faith and is believed to be accurate at the date of issue. Dimensions, weights and ratings are nominal and may vary with the manufacturer and production batch. It remains the responsibility of the purchaser to confirm that the product is suitable for the intended service conditions. Sunel Wala Building Materials Trading Co. LLC reserves the right to amend specifications without prior notice. This document does not form part of any contract of sale.