SS316 2PC BALL VALVE 2000 WOG NPT

2-Piece Full Bore High Pressure Ball Valve · Stainless Steel CF8M (316) · Locking Lever

BRAND: VALTEC | SKU: P-0038 | SIZE 1/4" TO 2" | 2000 PSI / 138 BAR SHELL



FIG. 1 | VALTEC SS316 2PC BALL VALVE, LOCKING LEVER HANDLE

PRODUCT OVERVIEW

The Valtec SS316 2PC Ball Valve (type V2X) is a two-piece, full bore, high pressure ball valve made in Taiwan for flow control and reliable shut-off in demanding service. Body, cap and ball are ASTM A351 CF8M stainless steel, with an AISI 316 blow-out proof stem.

Reinforced PTFE (RPTFE) seats, joint gasket and stem packing give tight sealing, and the two-piece body allows straightforward servicing. A lockable AISI 430 lever is fitted as standard. Typical service covers oil and gas, petrochemical, chemical processing and industrial pipeline systems.

Valve type	**2-piece ball valve, full bore**
Operation	**Manual, 90° lockable lever**
Body material	**ASTM A351 CF8M (SS 316)**
End connection	**Female NPT threaded**
Pressure rating	**2000 psi shell, 1500 psi seat (CWP)**
Size range	**1/4" to 2" (DN8 to DN50)**

TECHNICAL SPECIFICATION

Manufacturer type	**Valtec V2X**	Shell rating	**138 bar (2000 psi) at 38°C**
Body design	**2-piece, screwed cap**	Seat rating	**103 bar (1500 psi) at 38°C**
Port	**Full bore**	Max. temperature	**Approx. 200°C (P-T chart)**
End connection	**Female NPT**	Handle	**AISI 430, lockable**
Stem	**AISI 316, blow-out proof**	Operating torque	**50 to 315 kgf-cm by size**
Seats	**RPTFE**	Country of origin	**Taiwan**

BILL OF MATERIALS

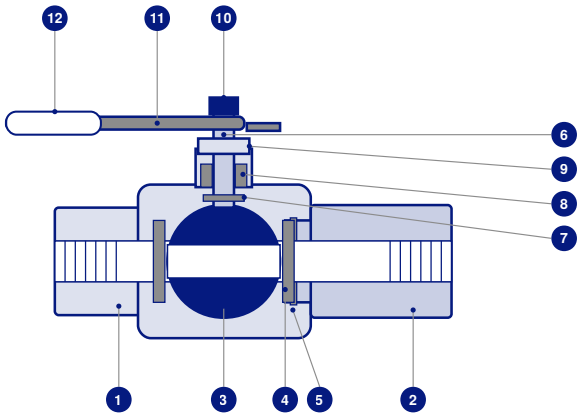

FIG. 2 | SECTIONAL ARRANGEMENT (SCHEMATIC)

#	COMPONENT	MATERIAL
1	Body	ASTM A351 CF8M
2	Cap	ASTM A351 CF8M
3	Ball	ASTM A351 CF8M
4	Ball seat (2 nos.)	RPTFE
5	Joint gasket	RPTFE
6	Stem	AISI 316
7	Thrust washer	RPTFE
8	Stem packing (2 nos.)	RPTFE
9	Gland nut	AISI 304
10	Stem washer and stem nut	AISI 304
11	Handle and lock device	AISI 430
12	Plastic cover	Plastic

Materials as per Valtec V2X spare parts list. A carbon steel version (V2X-C, ASTM A216 WCB body) is also produced by the manufacturer.

DIMENSIONS AND TORQUE

SIZE	DN	BORE ØD (MM)	L (MM)	H (MM)	W (MM)	TORQUE (KGF-CM)
1/4"	8	11.6	46.5	54	95	50
3/8"	10	12.8	46.5	54	95	50
1/2"	15	15	57	55	95	70
3/4"	20	20	65	63	110	95
1"	25	25	76	77	135	130
1.1/4"	32	32	87.5	82	135	170
1.1/2"	40	38	100	98	165	225
2"	50	50	123	108	165	315

Ød = bore, L = face to face length (threaded ends), H = centreline to top of handle, W = handle length. Dimensions from Valtec drawing V2X, Rev. A, are nominal and given for guidance only. Weights are confirmed on request.

ORDERING INFORMATION

FIELD	OPTIONS
Product code	P-0038
Size	1/4", 3/8", 1/2", 3/4", 1", 1.1/4", 1.1/2", 2"
Thread	Female NPT
Material	ASTM A351 CF8M (SS 316)
Handle	Lockable AISI 430 lever standard
Order example	**P-0038 / 1" / NPT / LOCKING LEVER**

Stock held in Dubai for fast despatch across the UAE and GCC. Sizes 2.1/2" and 3" (1500 psi shell, 1000 psi seat) can be offered against enquiry.

PRESSURE AND TEMPERATURE

Shell, 1/4" to 2"	**138 bar (2000 psi) up to 38°C**
Seat (RPTFE), 1/4" to 2"	**103 bar (1500 psi) up to 38°C**
Seat derating	**Linear above 38°C**
Seat, approx. at 150°C	**32 bar (465 psi)**

The working limit is the lower of the shell and seat rating. Values above 38°C are read from the Valtec P-T chart and are indicative. Confirm duty with SWBM before use at elevated temperature.

TYPICAL APPLICATIONS

- Oil and gas production and utility lines
- Petrochemical and chemical processing
- Hydraulic and high pressure water lines
- Industrial pipeline isolation
- Instrument and sampling supply lines
- Compressed air and gas systems

COMPLIANCE AND QUALITY

- Manufactured by Valtec, Taiwan, to drawing V2X Rev. A
- Body, cap and ball in ASTM A351 CF8M
- AISI 316 blow-out proof stem
- Full bore design with RPTFE seats
- Lockable handle fitted as standard
- Material test certificates available on request

INSTALLATION AND OPERATION

- Flush the line thoroughly before installation to clear debris, scale and thread swarf
- Install with the valve in the fully open position
- Apply PTFE tape or an approved sealant to the male pipe thread only
- Tighten on the end hexagon flats, never on the handle or stem
- The valve is open when the lever is in line with the pipe, and closed at 90°
- Operate the valve periodically in low use lines to prevent seat sticking

COMPANY

Sunel Wala Building Materials
Trading Co. LLC (SWBM)
Dubai, United Arab Emirates

SALES ENQUIRIES

info@swbm-fittings.com
Tel: +971 4 238 5652
Mobile / WhatsApp: +971 50 748 1772

ONLINE

www.swbm-fittings.com
Brand: Valtec

The information in this data sheet is provided in good faith and is believed to be accurate at the date of issue. Dimensions, weights and ratings are nominal and may vary with the manufacturer and production batch. It remains the responsibility of the purchaser to confirm that the product is suitable for the intended service conditions. Sunel Wala Building Materials Trading Co. LLC reserves the right to amend specifications without prior notice. This document does not form part of any contract of sale.